DESCRIPTION:
THREE GANG ALUMINUM CARPET FLANGE, 6 1/4" X 11 1/2"

ALUMINUM[12] 8/32 X 1.23 MOUNTING SCREWS INCLUDED

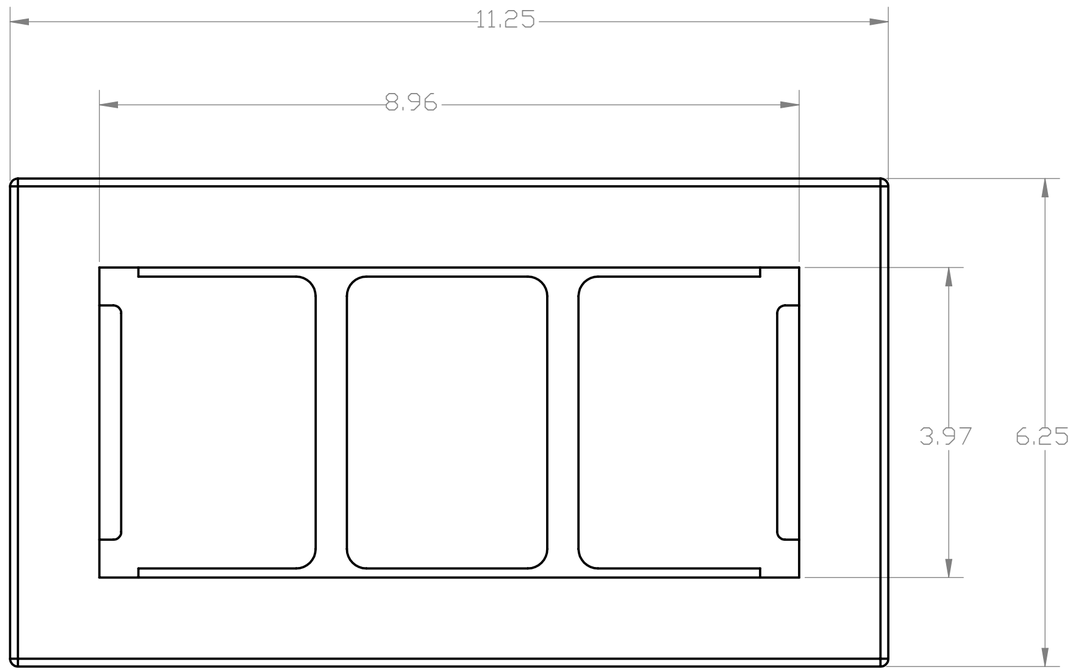

TOP VIEW

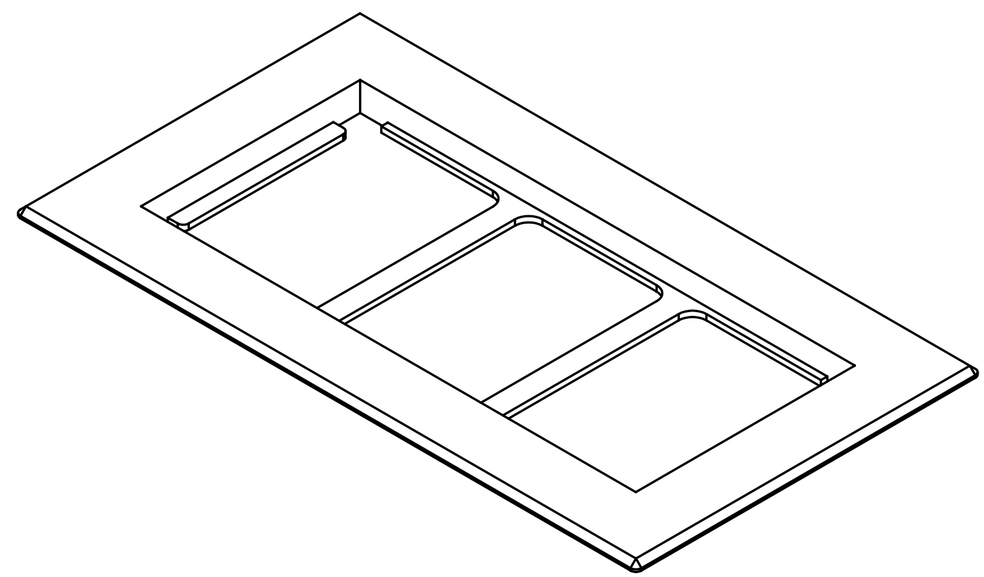

ISOMETERIC VIEW

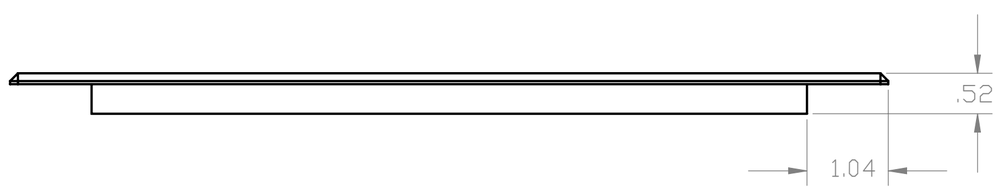

FRONT VIEW

LEW ELECTRIC
FITTINGS COMPANY
SERVING THE ELCTRICAL INDUSTRY SINCE 1901

1801 W. St. Charles Rd. Maywood, IL 60153
PHONE: 708-345-2075

UNLESS OTHERWISE SPECIFIED:		NAME	DATE
DIMENSIONS ARE IN INCHES TOLERANCES: FRACTIONAL ± ANGULAR: MACH ± BEND ± TWO PLACE DECIMAL ± THREE PLACE DECIMAL ±	DRAWN	PJG	2/18/2013
INTERPRET GEOMETRIC TOLERANCING PER:	COMMENTS:		
MATERIAL			
FINISH			
DO NOT SCALE DRAWING			

TITLE:
CF-1103-DFB-A

SIZE	DWG. NO.	REV
C		A

WEIGHT: SHEET 1 OF 8